GENERAL NOTES:

1. DIMENSIONS
   - SHOWN IN INCHES W/ MM EQUIVALENTS IN BRACKETS
   - OVERALL LENGTH = CENTERS + FLOAT LENGTH + 2 * MATING FLANGE THICKNESS + 6.25" [159]
2. OPERATING CONDITIONS
   - MAX PRESSURE, MAX TEMPERATURE, & MIN SPECIFIC GRAVITY REQUIRED FOR PROPER GAGE DESIGN
3. PART NUMBER
   - CONSULT "MAGNICATOR® MAGNETIC LIQUID LEVEL INDICATION PRODUCTS" (BULLETIN M100.01) FOR COMPLETE PART NUMBER DETAILS & LIST OF AVAILABLE OPTIONS
4. STANDPIPE SIZE
   - 3" [80] SCH. 40 (STANDARD)
   - CONSULT FACTORY FOR OPTIONAL STANDPIPE SIZE AND/OR SCHEDULE (DEPENDENT ON OPERATING CONDITIONS)
   - ACTIVE MAGNETIC FIELD (120° TOTAL RANGE) BASED ON GUIDE-BAR ORIENTATION AS SHOWN. INDICATORS, SWITCHES, TRANSMITTERS MUST BE INSTALLED WITHIN ACTIVE MAGNETIC FIELD. LOCATION OF INDICATOR MUST BE CONFIRMED AT TIME OF ORDER.
5. MATERIALS OF CONSTRUCTION
   - ◉ 304/304LSS W/ CS TRIM (FLANGES, BOLTING, & PLUGS) (STANDARD)
   - ○ 316/316LSS W/ CS TRIM (FLANGES, BOLTING, & PLUGS) (STANDARD)
   - ○ ALL 304/304LSS (316SS BOLTING) (STANDARD)
   - ○ ALL 316/316LSS (316SS BOLTING) (STANDARD)
   - CONSULT "MAGNICATOR® MAGNETIC LIQUID LEVEL INDICATION PRODUCTS" (BULLETIN M100.01) FOR A COMPLETE LIST OF AVAILABLE MATERIALS
6. FLOAT MATERIALS
   - 316LSS (STANDARD)
   - TITANIUM (STANDARD)
   - MONEL 400
7. FLOAT LENGTHS
   - 12" [305] (STANDARD)
   - 17" [432] (STANDARD)
   - 22" [559] (STANDARD)
   - LENGTHS DEPENDENT ON OPERATING CONDITIONS
   - CONSULT FACTORY FOR CUSTOM LENGTHS
8. GASKET MATERIALS
   - FLEXITALLIC "CGI" (OR EQUAL) SPIRAL-WOUND (STANDARD) W/ CS OUTER RING, 304 OR 316SS INNER RING, & GRAPHITE FILLER
   - CONSULT FACTORY FOR OPTIONAL GASKET MATERIALS
9. PROCESS CONNECTIONS
   - ½" [15] THRU 1" [25] FNPT & MNPT (STANDARD)
   - 1 ½" [40] THRU 6" [150] FNPT & MNPT AVAILABLE ON REQUEST (REQUIRE FITTINGS THAT INCREASE SECTION A-A DIMENSION SHOWN)
   - (2) SIDE CONNECTIONS (STANDARD)
   - (2+) SIDE CONNECTIONS AVAILABLE ON REQUEST
10. VENT / DRAIN CONNECTIONS
    - ½" [15] FNPT (SHOWN) (STANDARD)
    - ½" [15] THRU 1 ½" [40] FNPT, MNPT, FSW, & MSW
    - ½" [15] TO 3" [80] RAISED-FACE ANSI/ASME & DIN FLANGED
11. INDICATION
    - ◉ YELLOW / BLACK FLAGS IN ALUMINUM HOUSING (SHOWN) (STANDARD)
    - ○ HERMETICALLY-SEALED FLAGS IN POLYCARBONATE TUBE W/ 316SS FRAME (BULLETIN M100.110)
    - ○ HERMETICALLY-SEALED FLAGS IN GLASS TUBE W/ 316SS FRAME (BULLETIN M100.110)
    - ○ NIGHTSTAR™ (ILLUMINATED FLAGS) (120 OR 240 VAC)(BULLETIN M100.140)
12. SCALES
    - ◉ FEET / INCHES (SHOWN) (STANDARD)
    - ○ METER / MILLIMETER
    - ○ PERCENT
    - CONSULT FACTORY FOR SPECIAL SCALES
13. POINT LEVEL SWITCHES
    - 0 SAS-16 TRI-MAGNET (BULLETIN M100.27)
    - 0 RS-2 (SPDT) HERMETICALLY-SEALED REED (BULLETIN M100.20)
    - 0 RS-2/2 (DPDT) HERMETICALLY-SEALED REED (BULLETIN M100.20)
14. 4-20mA TRANSMITTERS
    - 0 MTII-4300 MAGNETOSTRICTIVE (BULLETIN M100.23)
    - 0 RST2 REED SWITCH (BULLETIN M100.22)
15. NON-FROST EXTENSION RECOMMENDED FOR SERVICE BELOW 0°F (-18°C) OR WHEN COLD INSULATION WILL BE APPLIED.

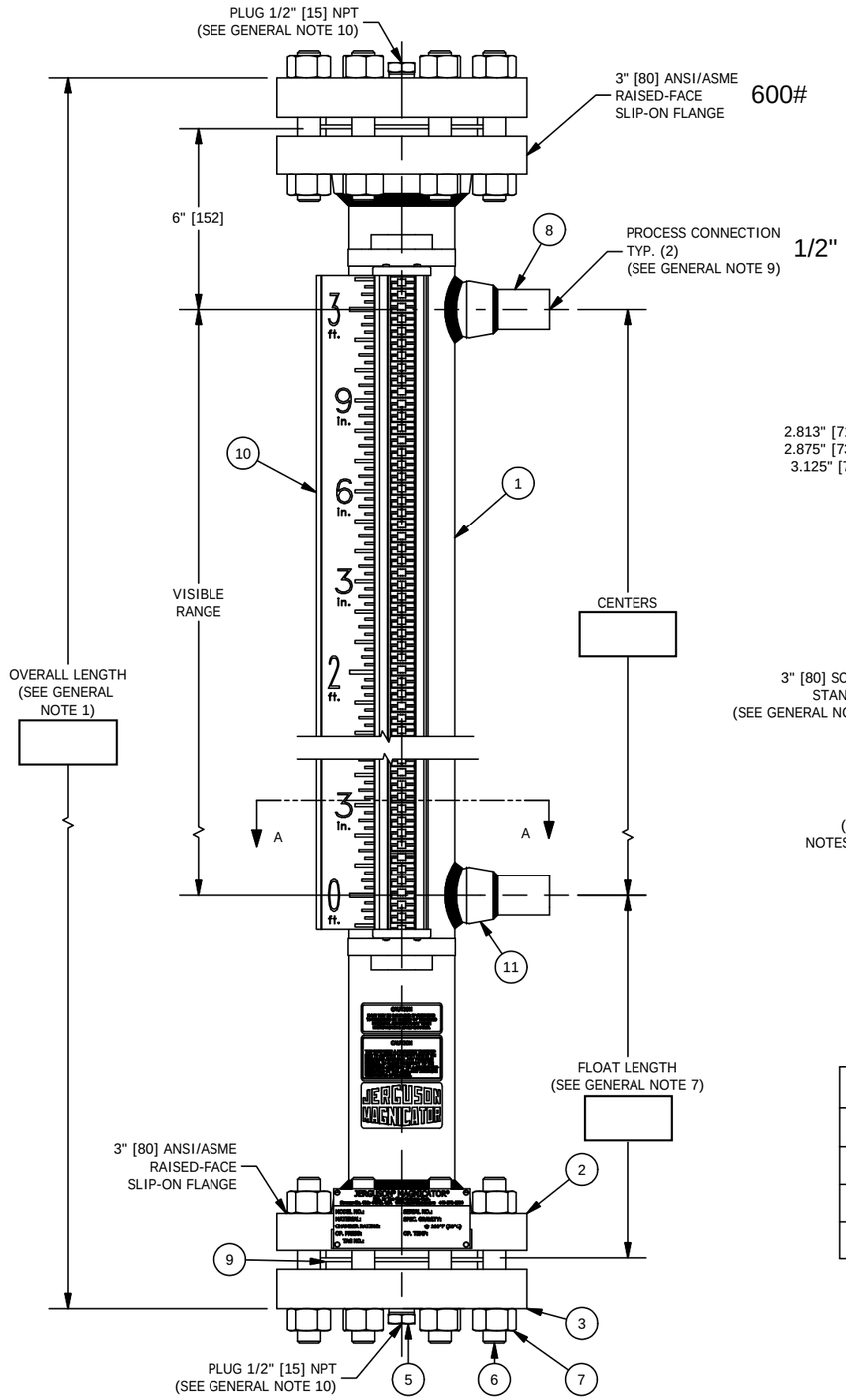

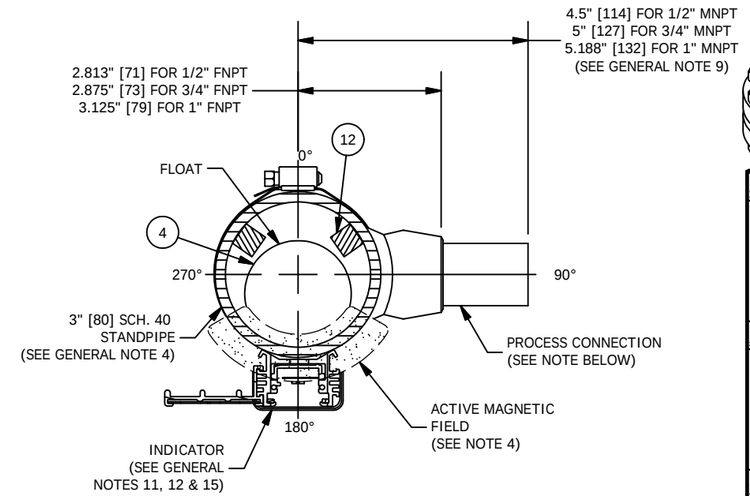

SECTION A-A

NOTE: AS STANDARD, PROCESS CONNECTIONS WILL BE ORIENTED AT 0°. THEY ARE SHOWN IN THIS DRAWING AT 90° FOR EASE OF VIEWING.

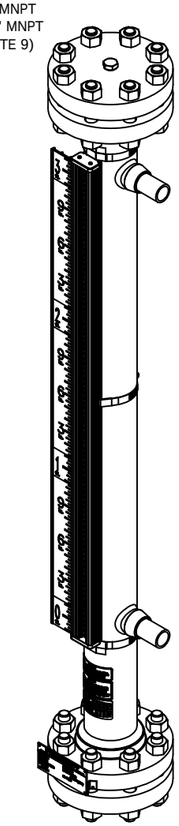

BILL OF MATERIAL

NO.	NAME OF PART	MATERIAL	REMARKS
1	STANDPIPE		
2	FLANGE, SLIP-ON		
3	FLANGE, THREADED		
4	FLOAT		
5	PLUG		
6	STUD		
7	HEAVY HEX NUT		
8	PROCESS CONNECTION		
9	GASKET		
10	INDICATOR		
11	PIPET		
12	GUIDE BAR		

OPERATING CONDITIONS	
MAX PRESSURE	
MAX TEMPERATURE	
MIN SPECIFIC GRAVITY	
PROCESS FLUID	

REV	DATE	REVISION	BY
1	4/12/2018	DELETE LEVELSTAR, "II" NOTATION METRIC SCALE TO M/MM, MTII4200 TO 4300	JLi

MANUFACTURED BY
Clark·Reliance®
16633 FOLTZ PARKWAY
STRONGSVILLE, OH 44149 USA
(440) 572-1500 | www.clarkreliance.com
© Clark-Reliance® Corporation. All Rights Reserved.

JERGUSON®
MODEL MFP-EST
FLASHPROOF MAGNICATOR
(W/ 600-2500# ANSI/ASME FLANGES)

DRAWN:	TJB
CHECKED:	MK
DATE:	6/10/2013
REVISION:	1
DRAWING NO.:	MFP-EST6
REV.:	1